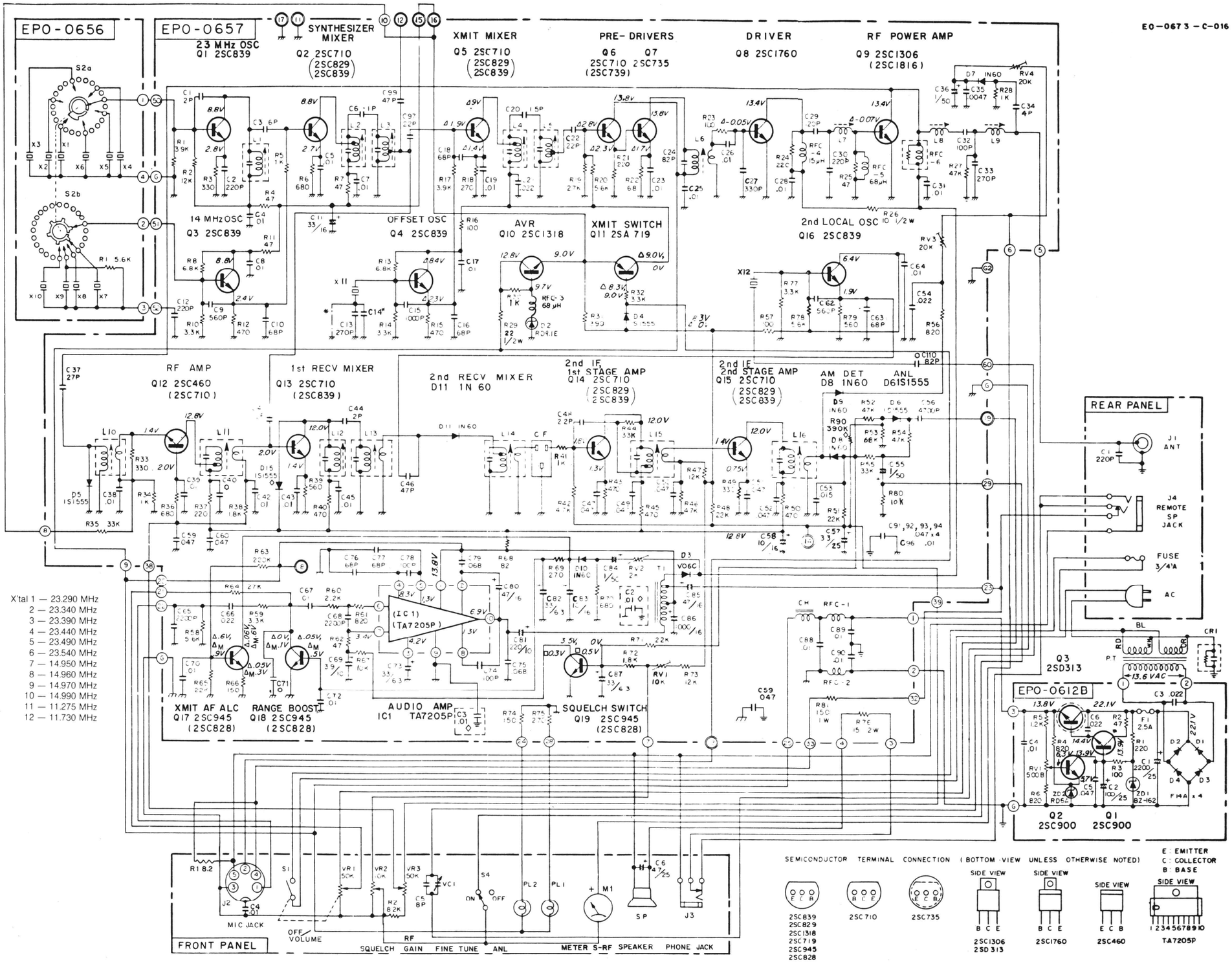

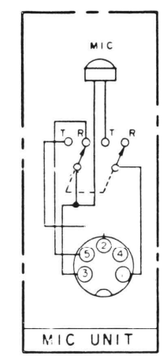

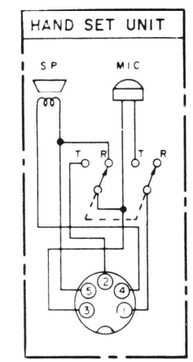

NOTES:

1. All voltages are measured with a VTVM (11 mega-ohms/V) from a p.c. board ground and with the transceiver connected to an external power supply adjusted for 120 VAC.

   All readings are measured with the transceiver in the receive mode with no signal and unsquelched (except as noted). All are in VDC (except as noted).

   If measurements obtained exceed ±20% of the indicated values, the cause of the difference should be corrected.

2. Symbols used —

   □ — receive voltage, squelched

   △ — transmit voltage, unmodulated

   Δ_M — transmit voltage, modulated (whistle)

   ⬡ — factory selected value

   ✳ — field-selectable component and/or value

   ⏚ — chassis ground

   ⏚ — p.c. board ground

   ◇ — component mounted on foil side of p.c. board

Figure 3-10. Schematic Diagram