REALISTIC®

Service Manual

21-145

TRC-24B

5 WATT SOLID STATE C.B. TRANSCEIVER

Catalog Number 21-145

CUSTOM MANUFACTURED FOR RADIO SHACK TC A TANDY CORPORATION COMPANY

SPECIFICATIONS

RECEIVER	Nominal	Limit
SENSITIVITY		
10 dB S+N/N	0.5 μV	1.0 μV
20 dB S+N/N	1.5 μV	2.0 μV
SELECTIVITY		
at ±10kHz	60 dB	50 dB
at ±3kHz	-8 dB	-6 dB
SQUELCH RANGE		
minimum	0.25 μV	0.5 μV
maximum	1000 μV	100 – 10000 μV
IF FREQUENCY	11.275 MHz/455 kHz	
AUDIO POWER OUTPUT (in PA, 10% distortion)	4.0 W	3.5 W
AUDIO RESPONSE (compared to 1kHz)	400 Hz: -6 dB	400 Hz: -6 ± 5 dB
	2 kHz: -8 dB	2 kHz: -8 ± 5 dB
IMAGE RESPONSE	28 MHz: 46 dB	48 MHz: 40 dB
	other: 51 dB	other: 45 dB
CURRENT DRAIN	230 mA	300 mA
TRANSMITTER		
DC INPUT POWER	12.0 V x 390 mA	
RF OUTPUT POWER	4.0 W	3.5 W
SPURIOUS RADIATION	55 dB	50 dB
MODULATION	+100 -90%	
RF FREQUENCY STABILITY	0.002%	0.005%
POWER REQUIREMENT	12–14V DC Negative Ground	
MAX. POWER CONSUMPTION	15 watts	
MICROPHONE	Dynamic	

NOTE: Nominal Specs represent the design specs; all units should be able to approximate these – some will exceed and some may drop slightly below these specs. Limit Specs represent the absolute worst condition which still might be considered acceptable; in no case should a unit perform to less than within any Limit Spec.

CONTROLS

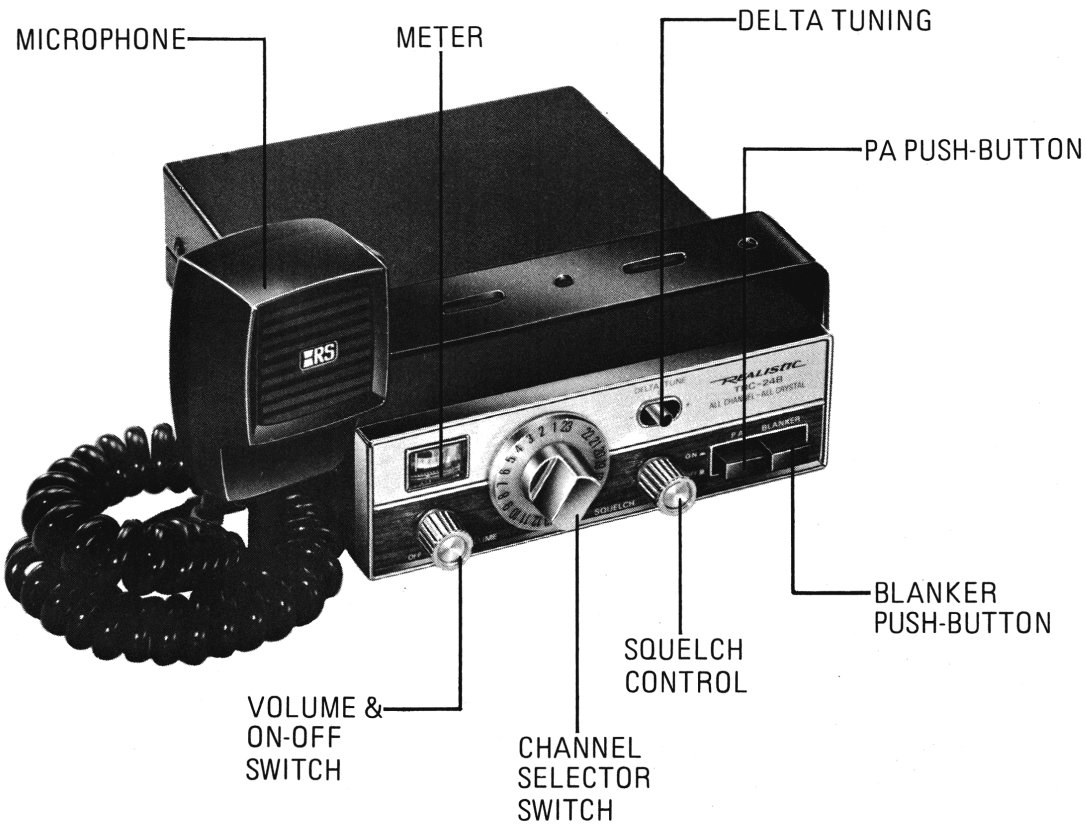

BLOCK DIAGRAM

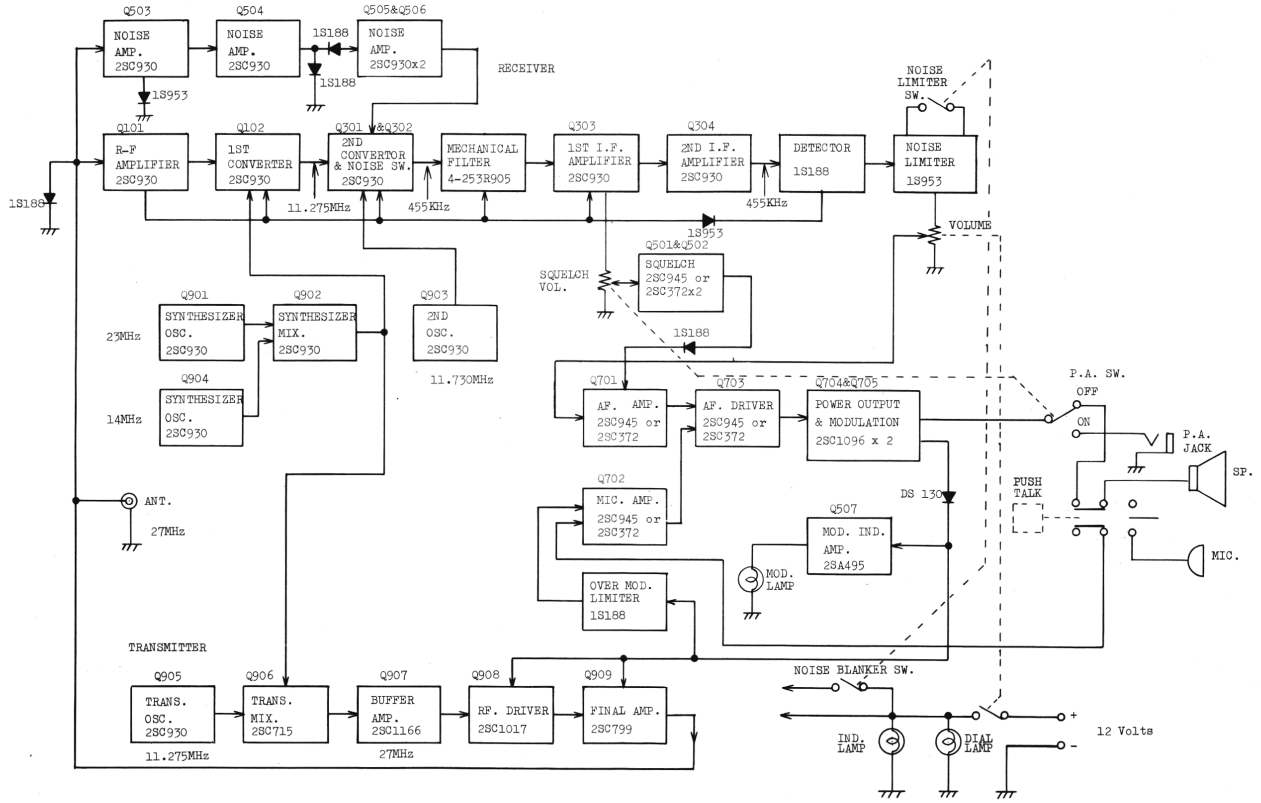

DISASSEMBLY

Removal of case

After removing mounting brackets, remove four screws holding case as shown in Figure 2.

2. Removal of printed circuit board

   Remove six screws holding circuit board as shown in Figure 3.

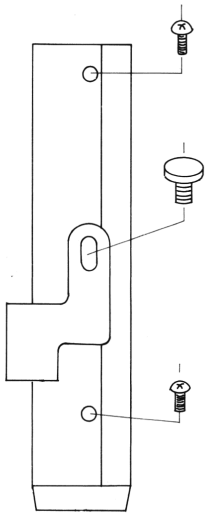

Figure 2

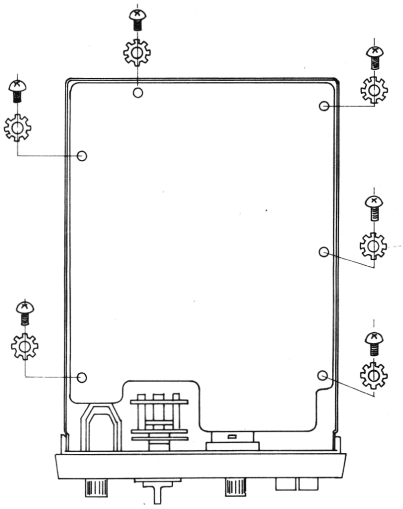

Figure 3

ALIGNMENT OF RECEIVER SECTION

EQUIPMENT REQUIRED

Signal generator 455 kHz and 27 MHz
Modulated 1000 Hz, 30% AM,
Output Impedance 50 ohms.
VTVM
DC power supply 13.8 volts, 1.5A.
Oscilloscope, Frequency Meter or Counter.

PROCEDURE

Allow test equipment and set at least 15 minutes to warm up before starting the alignment.
Output Level: Keep signal generator as low as possible to prevent AGC overload.
Output level of test set should be kept under 2 volts.
See Alignment Set up on page 6 and Alignment points on page 8.

Step	Connect Signal Source to–	Connect Output Indicator to–	Set Signal to–	Adjust	Adjust for–	Step
1	Set Channel Selector to Ch. # 13					1
2	Turn VR7 (Volume) fully clockwise.					2
3	Turn VR3 (Squelch) fully counterclockwise.					3
4		Oscilloscope to L904 Secondary		L901	Maximum Amplitude	4
5				L902		5
6				L903		6
7				L904		7
8 9 10 11 12 13 14 15	Sig. Gen. Connected to ANT. terminal.	V.T.V.M. connected across ext. speaker jack 8 ohm resistive load.	27.115MHz (Modulated) Signal input should be under 50μV	L101 L102 T301 T302 T303 T304 T305 T306	Maximum Output	8 9 10 11 12 13 14 15
16	Repeat steps 8 through 15 as necessary to obtain maximum sensitivity					16
17	Signal Gen. connected to antenna jack	V.T.V.M. connected across ext. speaker jack	27.115MHz Signal input should be 0.25μV	VR1	Adjust VR1 for 2.0 volts V.T.V.M. indication	17
18	Same as 17	Same as 17	27.115MHz Signal input should be to 1000μV	VR2	Adjust for squelch open with 1000μV input	18
19	Signal Gen. connect to antenna jack. Signal generator output 10-100mV	Connect DC voltmeter between R507 hot end ground side.	25MHz modulated with 100Hz pulses.	L501 L502 L503 L504	Adjust for max. DC output across R507	19
20	Signal Gen. connect to antenna jack (100μV)	8 ohm resistive load	27.115MHz	VR4	Adjust for zero reading on the S meter	20
21	Signal Gen. connect to antenna jack (100μV)	8 ohm resistive load	27.115MHz	VR6	Adjust for S9 reading on the S meter	21

ALIGNMENT OF TRANSMITTER SECTION

This transceiver meets all requirement of F.C.C. Rules and Regulations, Part 95. Only those persons properly licensed by the F.C.C. are permitted to repair or adjust any malfunctioning unit found to be transmitting illegelly (refer to F.C.C. Rules and Regulations, Part 95, Sub part D, Section 95.)

PROCEDURE

Allow test equipment and set at least 15 minutes to warm up before starting the alignment.

RF Output meter or 50 ohms non-inductive dummy must be connected to the antenna jack.

See Alignment Set up on page 6 and Alignment points on page 8.

Step	Connect Signal Source to–	Connect Output Indicator to–	Adjust	Adjust fcr–	Step
1	Set Channel Selector to Ch. # 13				1
2		Watt Meter Across Antenna Jack or Oscilloscope may be used as the Output Indicator.	L905	Key Transmitter and adjust for Maximum Output.	2
3			L906		3
4			L907		4
5			L908		5
6			L910		6
7			L912		7
8			L913		8
9	Repeat steps 2 through 8 as necessary to obtain maximum output.				9
10	Audio Generator to microphone Jack	Oscilloscope to antenna jack and observe 80 to 100% modulation signal also watt meter across antenna jack	L910	Maximum Output	10
11	Adjust audio Signal level to obtain 80-100% modulation level.		L912		11
12			L913		12
13	Repeat steps 10 through 12 to obtain 3.5-4 watts output on all Channels				13
14	Check R.F. deviation with Digital Frequency Counter on all Channels				14
15	Audio Generater to microphone jack 100% modulation	Same as above	VR8	No distortion of modulation wave-form at 100% modulation with 15mV input at mic jack (See Fig. 4)	15
16	No Modulation	Same as above	VR5	3.5-4.0 on the R.F. meter (depending on output obtained in step 13)	16

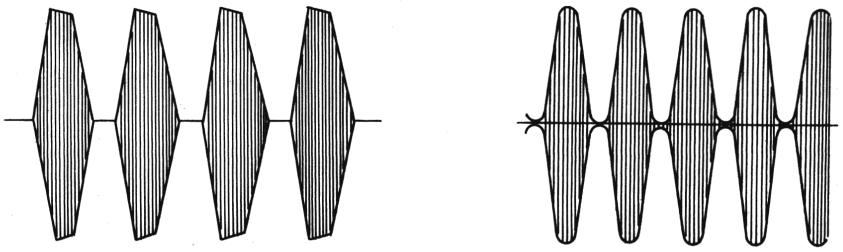

DISTORTION

100% MODULATION
NO DISTORTION

Figure 4

Receiver

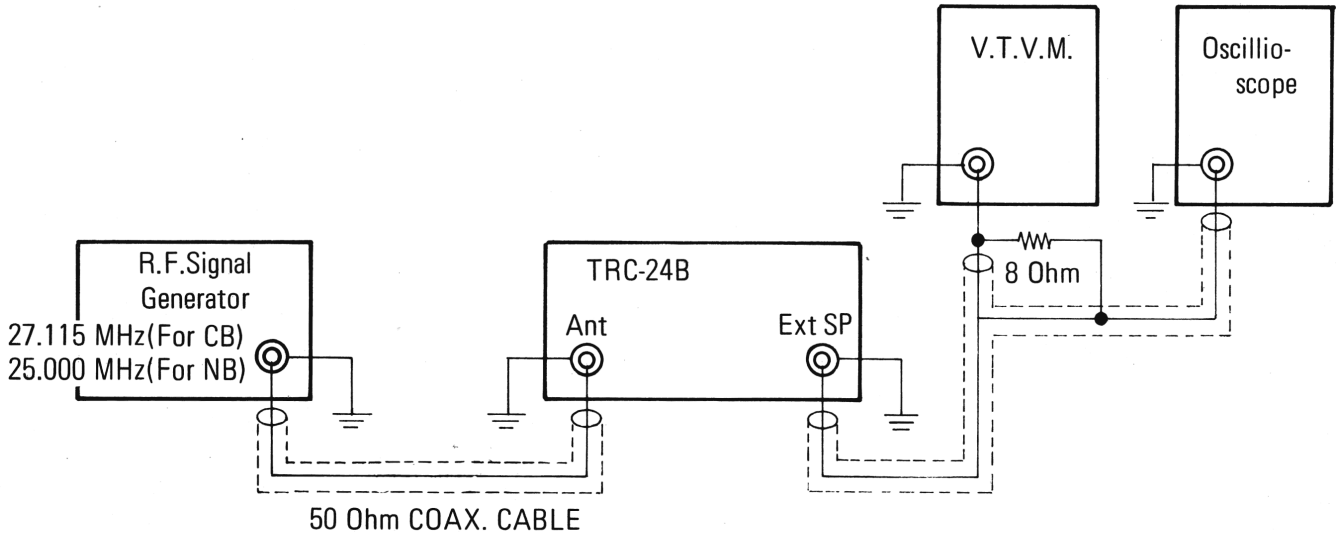

Transmitter

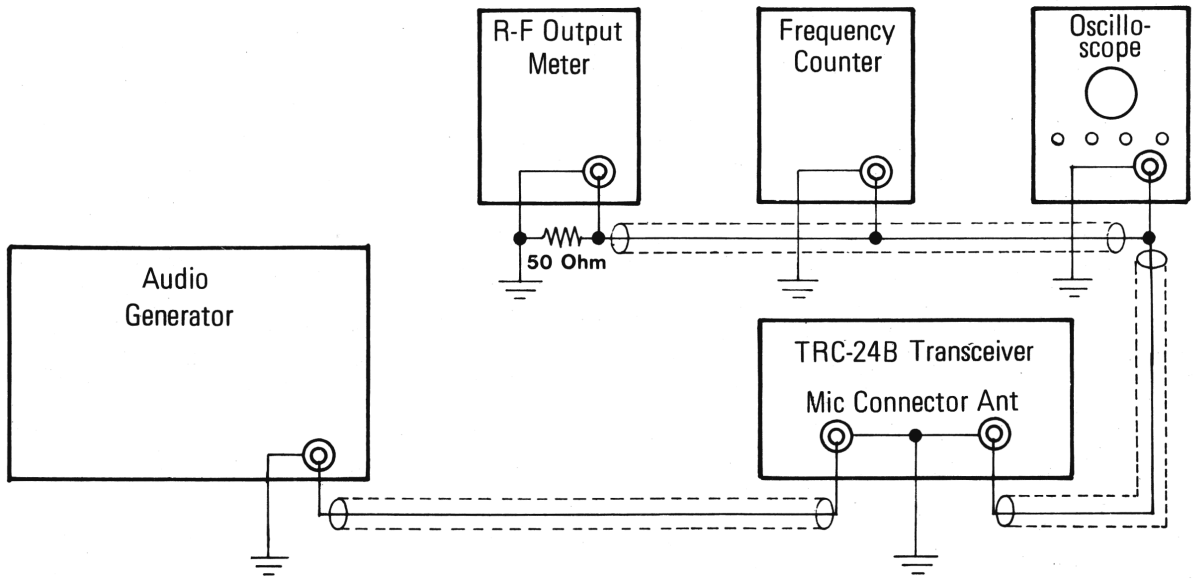

TEST EQUIPMENT SETUP DIAGRAM

ANTENNA SYSTEM

An antenna system can be considered to include the antenna proper, the feed line, and any coupling devices used for transferring power from the transmitter to the line and from the line to the antenna. Some simple systems may omit the transmission line or one or both of the coupling devices.

Selecting an Antenna

For mobile operation at 27 MHz, the vertical whip antenna is almost universally used. Since longer whips present mechanical difficulties, the length is usually limited to a dimension that will resonate as a quarter-wave antenna in the CB band; the car body serves as the ground connection. This antenna length is approximately 8.5 feet. With the whip length adjusted to resonance in the CB band, the impedance at the feed point, X, Fig.5, will appear as a pure resistance at the resonant frequency.

Mobile Antenna

Minimizing Losses

There is little that can be done about the nature of the coil. However, poor electrical contact between large surfaces of the car body, and especially between the point where the feed line is grounded and the rest of the body, can add materially to the ground-loss resistance. For example, the feed line, which should be grounded as close to the base of the antenna as possible, might be connected to the bumper, while the bumper may have poor contact with the rest of the body because of rust or paint.

Feeding the Antenna

It is usually found most convenient to feed the whip antenna with coax line. Unless very low-Q loading coils are used the feed-point impedance will always be appreciably lower than 52 ohms-the characteristic impedance of the commonly used coax line, RG-8/U or RG-58/U. One method of obtaining a match is shown in Fig. 6. For detailed information on precise loading and matching of Antennas and Transmission line systems, refer to the latest-edition of the **ARRL Handbook.**

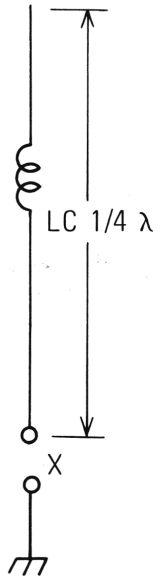

Figure 5

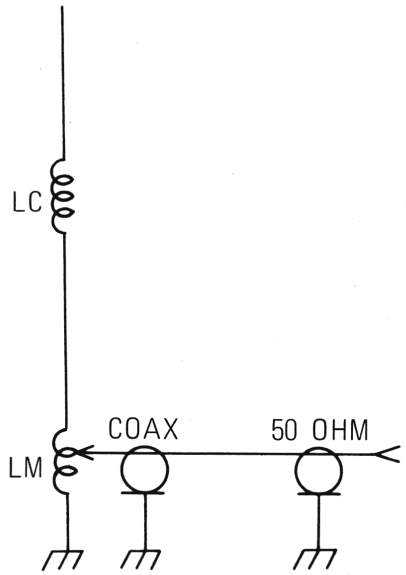

Figure 6

ALIGNMENT POINT (CHASSIS LAYOUT)

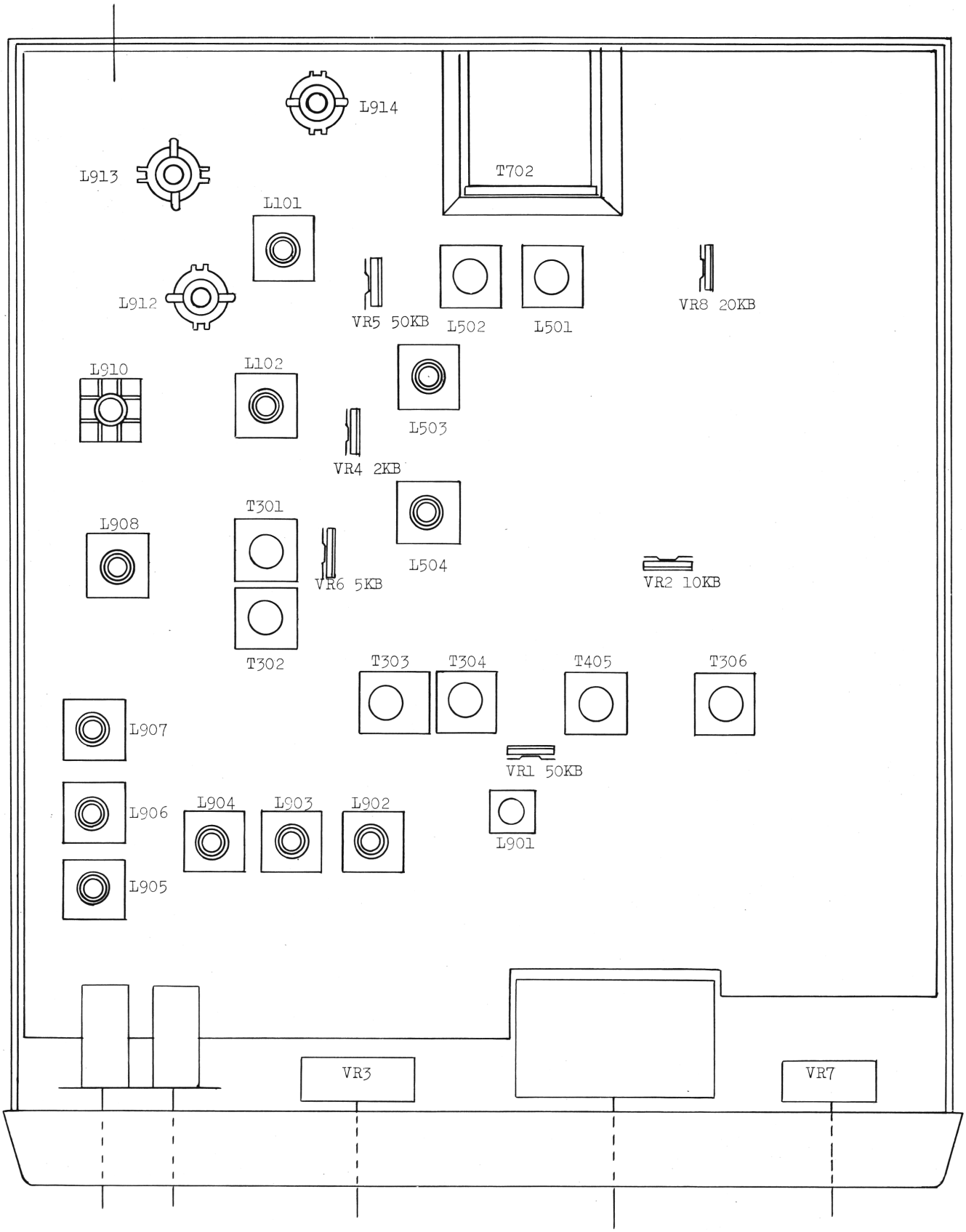

TRANSISTOR VOLTAGE CHART

1. Power supply voltage = 13.8V
2. All voltage measurements are with no signal input.
3. Measured with VTVM

		RX(V)	TX(V)			RX(V)	TX(V)			RX(V)	RX(V)			RX(V)		TX(V)
	B	1.9	—		B	1.3	1.2		B	1.6	1.6		B	0.7		—
Q101	C	5.5	—	Q702	C	11.0	7.5	Q904	C	6.0	6.0	Q502	C	0		—
	E	1.4	—		E	7.0	0.6		E	1.0	1.1		E	0		—
	B	2.0	—		B	1.6	1.6		B	—	1.6			NOISE BLANKER		
Q102	C	6.6	—	Q703	C	10.0	10.0	Q905	C	—	5.8					
	E	1.5	—		E	1.0	1.0		E	—	1.1			ON	OFF	
	B	2.0	—		B	0.63	0.63		B	—	2.6		B	2.5	0	—
Q301	C	5.2	—	Q704	C	13.8	13.3	Q906	C	—	7.0	Q503	C	13.8	0	—
	E	1.65	—		E	—	—		E	—	2.1		E	1.8	0	—
	B	2.0	—		B	0.63	0.63		B	—	1.4		B	2.25	0	—
Q302	C	5.2	—	Q705	C	13.8	13.3	Q907	C	—	13.3	Q504	C	13.8	0	—
	E	1.65	—		E	—	—		E	—	0.9		E	1.6	0	—
	B	2.1	—		B	2.0	2.0		B	—	—		B	0.75	0	—
Q303	C	6.0	—	Q901	C	7.0	7.0	Q908	C	—	12.1	Q505	C	8.9	0	—
	E	1.5	—		E	1.5	1.5		E	—	0.3		E	0.15	0	—
	B	0.7	—		B	1.5	1.5		B	—	—		B	0.66	0	—
Q304	C	7.0	—	Q902	C	7.0	7.0	Q909	C	—	12.0	Q506	C	13.0	0	—
	E	0	—		E	1.0	1.0		E	—	—		E	0	0	—
	B	1.9	—		B	1.5	—		B	0.5	—		B	—		13.5
Q701	C	2.3	—	Q903	C	7.0	—	Q501	C	0.72	—	Q507	C	—		0
	E	1.3	—		E	0.8	—		E	0	—		E	—		13.8

CRYSTAL SYNTHESIS TABLE

Transmit/Receive						
	23.290	23.340	23.390	23.440	23.490	23.540
14.950	1	5	9	13	17	21
14.960	2	6	10	14	18	22
14.970	3	7	11	15	19	—
14.990	4	8	12	16	20	23

2nd local	Transmit	11.275 MHz
	Receive	11.730 MHz
1st IF		11.275 MHz
2nd IF		455 kHz

CIRCUIT BOARD DIAGRAM (TOP VIEW)

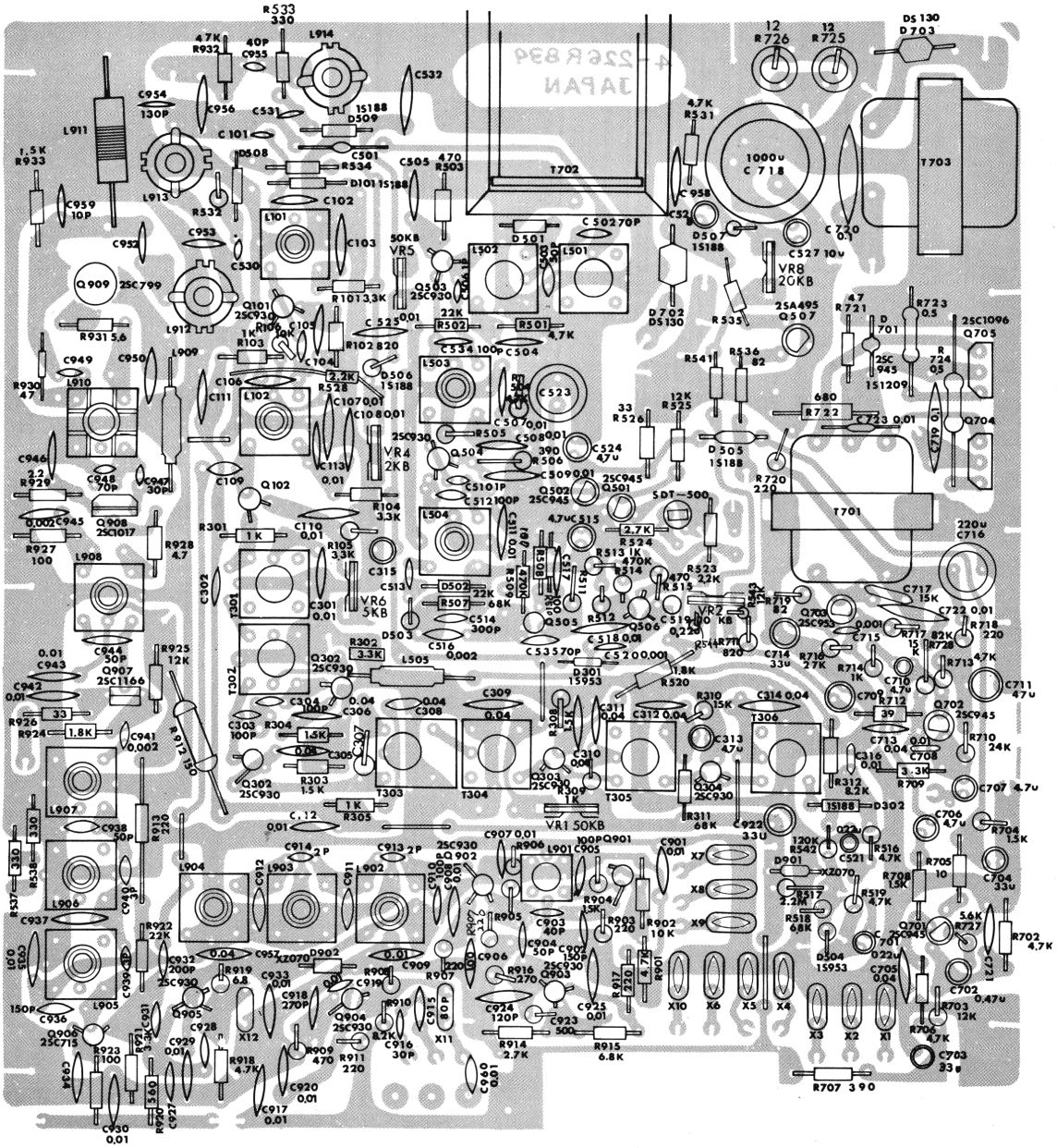

TROUBLE SHOOTING

RECEIVER SECTION

(1) Pilot lamp does not light when power switch is turned on.
- a. Check that power supply is connected with correct polarity.
- b. Check if power supply circuit is shorted.
- c. Check if power supply circuit is open because of accidental wire disconnection.
- d. Check if the Diode D703 is shorted.
- e. Check fuse.

(2) No sound (noise) from speaker.
- a. Check with an external speaker.
- b. Check if speaker leads are broken. Also, check other leads.
- c. Check that microphone switching is operating correctly.
- d. Check to be sure the audio circuit is functioning. Check the terminal voltage of transistor Q701, 703 and 704.
  (If you touch the terminals of volume control (VR7) with your finger, you should hear noise. Thus, you know the audio circuit is functioning.)
- e. Check that Squelch circuit is operating in a normal condition.
- f. Check for presence of 23MHz, 14MHz and 11.730 MHz oscillation. If so, check that all oscillations are strong enough.
- g. 11.730MHz: Check for presence of oscillation. Emitter voltages of Q301 and Q302 will be higher with XII installed (11,730 MHz) than when Xtal is shorted out.
- h. Check the connection of Channel Selector switch and Delta Tune switch.

(3) RF meter ("S" meter) operation is abnormal.
- a. Check that the emitter voltage of Q102 corresponds to incoming signal.
- b. Check if connections of VR5 and VR3 are broken.
- c. Check if C533 is shorted.

(4) Noise Blanker operation is abnormal.
- a. Check the voltages of Transistors Q503, Q504, Q505 and Q506. (ref: Transistor voltage chart).
- b. Check if coils L501, L502, L503, L504 and L505 are broken.

TRANSMITTER SECTION

(1) No output
- a. Insure microphone plug is inserted correctly.
- b. Try replacing microphone.
- c. Check for the presence of 23MHz, 14MHz and 11MHz oscillation. If so, are they strong enough?
- d. Insure PA switch is not pushed to PA position.
- e. Check that each transistor is operating normally.

(2) No Modulation (Modulation lamp does not light)
- a. Check if the direct current resistance of third coil of modulation transformer (T702) is from 1 to 1.2 ohm.
- b. Try replacing microphone.
- c. Check the terminal voltages of Q702.
- d. Check if value C708 and C528 are shorted.
- e. Check if value of C709, 710 and C707 are normal.

NO RECEIVING AND NO TRANSMITTING

(1) Check if microphone circuit is abnormal.
(2) Check for presence of 23MHz and 14MHz oscillation.
(3) Check if circuit voltages of Q901 and Q904 are OK.
(4) Check if voltages of Q902 are OK.
(5) Check if wire leads of coil L902, 903 and L904 are disconnected.

REPLACEMENT PARTS LIST

Symbol No.	Description	RS Part No.	Mfr's Part No.
	CAPACITORS		
C101	16 pfd ±5% 50V Ceramic		R-CKD160J
C102	40 pfd ±5% 50V Ceramic		R-CKD400J
C103	0.04 mfd ±20% 50V Ceramic		R-CKD403M
C104	0.01 mfd ±20% 50V Ceramic		R-CKD103M
C105	1 pfd ±0.25 pfd 50V Ceramic		R-CKD010C
C106	80 pfd ±5% 50V Ceramic		R-CKD800J
C107	0.01 mfd ±20% 50V Ceramic		R-CKD103M
C108	0.01 mfd ±20% 50V Ceramic		R-CKD103M
C109	30 pfd ±5% 50V Ceramic		R-CKD300J
C110	0.01 mfd ±20% 50V Ceramic		R-CKD103M
C111	0.01 mfd ±20% 50V Ceramic		R-CKD103M
C112	0.01 mfd ±20% 50V Ceramic		R-CKD103M
C113	0.01 mfd +80%–20% 50V Ceramic		R-CKD103Z
C301	0.01 mfd ±20% 50V Ceramic		R-CKD103M
C302	3 pfd ±0.25 pfd 50V Ceramic		R-CKD030C
C303	100 pfd ±5% 50V Ceramic		R-CKD101J
C304	100 pfd ±5% 50V Ceramic		R-CKD101J
C305	0.04 mfd ±20% 50V Ceramic		R-CKD403M
C306	0.04 mfd ±20% 50V Ceramic		R-CKD403M
C307	1000 mfd ±5% 50V Styrol		R-CQA102J
C308	0.04 mfd ±20% 50V Mylar		R-CQS403M
C309	0.04 mfd ±20% 50V Ceramic		R-CKD403M
C310	0.04 mfd ±20% 50V Ceramic		R-CKD403M
C311	0.04 mfd ±20% 50V Ceramic		R-CKD403M

Symbol No.	Description	RS Part No.	Mfr's Part No.
	CAPACITORS		
C312	0.04 mfd ±20% 50V Ceramic		R-CKD403M
C313	4.7 mfd 6.3V Electrolytic		R-C9882
C314	0.04 mfd ±20% 50V Ceramic		R-CKD403M
C315	10 mfd 16V Electrolytic		R-C9889
C316	0.01 mfd ±20% 50V Mylar		R-CQS103M
C501	16 pfd ±5% 50V Ceramic		R-CKD160J
C502	70 pfd ±5% 50V Ceramic		R-CKD700J
C503	50 pfd ±5% 50V Ceramic		R-CKD500J
C504	0.01 mfd ±20% 50V Ceramic		R-CKD103M
C505	0.01 mfd ±20% 50V Ceramic		R-CKD103M
C506	1 pfd ±0.25 pfd 50V Ceramic		R-CKD010C
C507	0.01 mfd ±20% 50V Ceramic		R-CKD103M
C508	0.01 mfd ±20% 50V Ceramic		R-CKD103M
C509	0.01 mfd ±20% 50V Ceramic		R-CKD103M
C510	1 pfd ±0.25 pfd 50V Ceramic		R-CKD010C
C511	0.01 mfd ±20% 50V Ceramic		R-CKD103M
C512	100 pfd ±5% 50V Ceramic		R-CKD101J
C513	0.0033 mfd ±10% 50V Ceramic		R-CKD332K
C514	300 pfd ±5% 50V Ceramic		R-CKD301J
C515	4.7 mfd 16V Electrolytic		R-C9883
C516	0.002 mfd ±10% 16V Ceramic		R-CKD202K
C517	0.01 mfd ±20% 50V Ceramic		R-CKD103M
C518	0.01 mfd ±20% 50V Ceramic		R-CKD103M
C519	0.22 mfd 16V Electrolytic		

Symbol No.	Description	RS Part No.	Mfr's Part No.
	CAPACITORS		
C520	0.001 mfd ±5% 50V Ceramic		R-CKD102J
C521	0.22 mfd 10V Electrolytic		R-C9120
C523	100 mfd 16V Electrolytic		R-C9907
C524	4.7 mfd 16V Electrolytic		R-C9883
C525	0.01 mfd ±10% 50V Ceramic		R-CKD103M
C527	10 mfd 16V Electrolytic		R-C9889
C528	1 mfd 50V Electrolytic		R-C9235
C529	0.04 mfd ±20% 50V Ceramic		R-CKD403M
C530	6 pfd ±0.25% 50V Ceramic		R-CKD060C
C531	5 pfd ±0.25 pfd 50V Ceramic		R-CKD050C
C532	0.01 mfd ±5% 50V Ceramic		R-CKD103J
C533	4.7 mfd 6.3V Electrolytic		R-C9882
C534	100 pfd ±5% 50V Ceramic		R-CKD101J
C535	50 pfd ±5% 50V Ceramic		R-CKD700J
C701	0.22 mfd 10V Electrolytic		R-C9120
C702	0.47 mfd 10V Electrolytic		
C703	33 mfd 6.3V Electrolytic		R-C9881
C704	33 mfd 10V Electrolytic		R-C9934
C705	0.04 mfd ±20% 50V Ceramic		R-CKD403M
C706	4.7 mfd 6.3V Electrolytic		R-C9882
C707	4.7 mfd 6.3V Electrolytic		R-C9882
C708	0.01 mfd ±20% 50V Mylar		R-CQS103M
C709	33 mfd 10V Electrolytic		R-C9934
C710	4.7 mfd 6.3V Electrolytic		R-C9882
C711	47 mfd 16V Electrolytic		R-C9886

Symbol No.	Description	RS Part No.	Mfr's Part No.
	CAPACITORS		
C713	0.04 mfd +80%–20% 50V Ceramic		R-CKD403Z
C714	33 mfd 6.3V Electrolytic		R-C9881
C715	0.01 mfd ±20% 50V Mylar		R-CQS103M
C716	220 mfd 16V Electrolytic		R-C9877
C717	0.04 mfd ±20% 50V Mylar		R-CQS403M
C718	1000 mfd 16V Electrolytic		R-C9878
C719	0.1 mfd +80%–20% 50V Ceramic		R-CKD104Z
C720	0.1 mfd +80%–20% 50V Ceramic		R-CKD104Z
C721	0.01 mfd ±20% 50V Ceramic		R-CKD103M
C722	0.01 mfd ±20% 50V Ceramic		R-CKD103M
C723	0.01 mfd ±20% 50V Mylar		R-CQS103M
C901	0.01 mfd ±20% 50V Ceramic		R-CKD103M
C902	150 pfd ±5% 50V Ceramic		R-CKD151J
C903	40 pfd ±5% 50V Ceramic		R-CKD400J
C904	50 pfd ±5% 50V Ceramic		R-CKD500J
C905	100 pfd ±5% 50V Ceramic		R-CKD101J
C906	0.01 mfd ±20% 50V Ceramic		R-CKD103M
C907	0.01 mfd +80%–20% 50V Ceramic		R-CKD103Z
C908	0.01 mfd ±20% 50V Ceramic		R-CKD103M
C909	0.01 mfd ±20% 50V Ceramic		R-CKD103M
C910	100 pfd ±5% 50V Ceramic		R-CKD101J
C911	50 pfd ±5% 50V Ceramic		R-CKD500J
C912	100 pfd ±5% 50V Ceramic		R-CKD101J
C913	2 pfd ±0.25 pfd 50V Ceramic		R-CKD020C

Symbol No.	Description	RS Part No.	Mfr's Part No.
	CAPACITORS		
C914	2 pfd ±0.25 pfd 50V Ceramic		R-CKD020C
C915	80 pfd ±5% 50V Ceramic		R-CKD800J
C916	30 pfd ±5% 50V Ceramic		R-CKD300J
C917	0.01 mfd ±20% 50V Ceramic		R-CKD103M
C918	270 pfd ±5% 50V Ceramic		R-CKD271J
C919	0.001 mfd ±5% 50V Ceramic		R-CKD102J
C920	0.01 mfd ±20% 50V Ceramic		R-CKD103M
C921	0.01 mfd +80%–20% 50V Ceramic		R-CKD103Z
C922	33 mfd 10V Electrolytic		R-C9934
C923	500 pfd ±10% 50V Ceramic		R-CKD501K
C924	120 pfd ±5% 50V Ceramic		R-CKD121J
C925	0.01 mfd ±20% 50V Ceramic		R-CKD103M
C926	0.01 mfd +80%–20% 50V Ceramic		R-CKD103Z
C927	200 pfd ±5% 50V Ceramic		R-CKD201J
C928	0.001 mfd ±5% 50V Ceramic		R-CKD102J
C929	0.01 mfd ±20% 50V Ceramic		R-CKD103M
C930	0.01 mfd ±20% 50V Ceramic		R-CKD103M
C931	130 pfd ±5% 50V Ceramic		R-CKD131J
C932	200 pfd ±5% 50V Ceramic		R-CKD201J
C933	0.01 mfd ±20% 50V Styrol		R-CQA103M
C934	0.01 mfd ±20% 50V Ceramic		R-CKD103M
C935	0.01 mfd ±20% 50V Ceramic		R-CKD103M
C936	150 pfd ±5% 50V Ceramic		R-CKD151J
C937	150 pfd ±5% 50V Ceramic		R-CKD151J

Symbol No.	Description	RS Part No.	Mfr's Part No.
	CAPACITORS		
C938	50 pfd ±5% 50V Ceramic		R-CKD500J
C939	3 pfd ±0.25 pfd 50V Ceramic		R-CKD030C
C940	3 pfd ±0.25 pfd 50V Ceramic		R-CKD030C
C941	0.002 mfd ±10% 50V Ceramic		R-CKD202K
C942	0.01 mfd ±20% 50V Ceramic		R-CKD103M
C943	0.01 mfd ±20% 50V Ceramic		R-CKD103M
C944	50 pfd ±5% 50V Ceramic		R-CKD500J
C945	0.002 mfd ±10% 50V Ceramic		R-CKD202K
C946	0.01 mfd ±20% 50V Ceramic		R-CKD103M
C947	30 pfd ±5% 50V Ceramic		R-CKD300J
C948	70 pfd ±5% 50V Ceramic		R-CKD700J
C949	0.001 mfd ±20% 50V Mylar		R-CSQ102M
C950	0.04 mfd ±20% 50V Ceramic		R-CKD403M
C951	0.04 mfd ±20% 50V Ceramic		R-CKD403M
C952	130 pfd ±5% 50V Ceramic		R-CKD131J
C953	270 pfd ±5% 50V Ceramic		R-CKD271J
C954	130 pfd ±5% 50V Ceramic		R-CKD131J
C955	40 pfd ±5% 50V Ceramic		R-CKD400J
C956	0.01 mfd ±20% 50V Ceramic		R-CKD103M
C957	0.04 mfd ±20% 50V Ceramic		R-CKD403M
C958	0.04 mfd ±20% 50V Ceramic		R-CKD403M
C959	10 pfd ±5% 50V Ceramic		R-CKD100J
C960	0.01 mfd +80%–20% 50V Ceramic		R-CKD103Z
C961	270 pfd ±5% 50V Ceramic		R-CKD271J

Symbol No.	Description	RS Part No.	Mfr's Part No.
	SEMI-CONDUCTORS		
D101	1S188 FM Diode		1S188
D301	1S953 Diode		1S953
D302	1S188 AM Diode		1S188
D501	1S953 Diode		1S953
D502	1S188 FM Diode		1S188
D503	1S188 FM Diode		1S188
D504	1S953 Diode		1S953
D505	1S188 AM Diode		1S188
D506	1S188 AM Diode		1S188
D507	1S188 AM Diode		1S188
D508	1S188 AM Diode		1S188
D509	1S188 AM Diode		1S188
D701	1S1209 Varistor		1S1209
D702	DS-130 E Diode		DS-130
D703	DS-130 E Diode		DS-130
D901	ZX070 Diode		ZX070
D902	ZX070 Diode		ZX070
	COILS		
L101	Antenna Coil	CA-2991	4-275R326
L102	RF Coil	CA-4498	4-259R828
L501	Antenna Coil	CA-2991	4-275R326
L502	Antenna Coil	CA-2991	4-275R326
L503	RF Coil	CA-4498	4-259R828
L504	RF Coil	CA-4498	4-259R828
L505	RF Choke Coil	CB-2206	4-253R701
L506	Choke Coil	CB-2209	4-253R131
L901	OSC Coil	CA-4509	4-259R813
L902	RF Coil	CA-4499	4-259R825
L903	RF Coil	CA-4500	4-259R826
L904	RF Coil	CA-4501	4-259R827
L905	RF Coil	CA-4502	4-259R801
L906	RF Coil	CA-4502	4-259R801
L907	RF Coil	CA-4503	4-259R802
L908	RF Coil	CA-4504	4-259 R10904A
L909	RF Choke Coil	CB-2206	4-253R701
L910	RF Coil	CA-4508	4-259R823
L911	Choke Coil	CB-2207	4-255R103
L912	RF Coil	CA-4505	4-259R805
L913	RF Coil	CA-4506	4-259R806
L914	RF Coil	CA-4507	4-259R807

Symbol No.	Description	RS Part No.	Mfr's Part No.
	TRANSISTORS & CRYSTALS		
Q101	2SC930 D Transistor		2SC930
Q102	2SC930 D Transistor		2SC930
Q301	2SC930 D Transistor		2SC930
Q302	2SC930 D Transistor		2SC930
Q303	2SC930 D Transistor		2SC930
Q304	2SC930 D Transistor		2SC930
Q501	2SC372 Y or 2SC945 R or Q Transistor		2SC372 or 2SC945
Q502	2SC372 Y or 2SC945 R or Q Transistor		2SC372 or 2SC945
Q503	2SC930 E Transistor		2SC930
Q504	2SC930 E Transistor		2SC930
Q505	2SC930 D Transistor		2SC930
Q506	2SC930 D Transistor		2SC930
Q507	2SA495 O Transistor		2SA495
Q701	2SC372 Y or 2SC945 R or Q Transistor		2SC372 2SC945
Q702	2SC372 Y or 2SC945 R or Q Transistor		2SC372 2SC945
Q703	2SC372 Y or 2SC945 R or Q Transistor		2SC372 2SC945
Q704	2SC1096 4ZL Transistor		2SC1096
Q705	2SC1096 4ZL Transistor		2SC1096
Q901	2SC930 D Transistor		2SC930
Q902	2SC930 E Transistor		2SC930
Q903	2SC930 D Transistor		2SC930
Q904	2SC930 D Transistor		2SC930
Q905	2SC930 E Transistor		2SC930
Q906	2SC715 D or E Transistor		2SC715
Q907	2SC1166 O Transistor		2SC1166
Q908	2SC1017 Transistor		2SC1017
Q909	2SC799 Transistor		2SC799
	Crystal 23.290MHz HC-18U		4-225R809
	Crystal 23.340MHz HC-18U		4-225R810
	Crystal 23.390MHz HC-18U		4-255R811
	Crystal 23.440MHz HC-18U		4-225R812
	Crystal 23.490MHz HC-18U		4-225R813
	Crystal 23.540MHz HC-18U		4-225R814
	Crystal 14.950MHz HC-18U		4-225R805
	Crystal 14.960MHz HC-18U		4-225R806
	Crystal 14.970MHz HC-18U		4-225R807
	Crystal 14.990MHz HC-18U		4-225R808
	Crystal 11.730MHz HC-18U		4-225R803
	Crystal 11.275MHz HC-18U		4-225R804

Symbol No.	Description	RS Part No.	Mfr's Part No.
	RESISTORS		
R101	3.3 Kohm ±10% ¼W		R-R332KB
R102	820 ohm ±10% ¼W		R-R821KB
R103	1 Kohm ±10% ¼W		R-R102KB
R104	3.3 Kohm ±10% ¼W		R-R332KB
R105	3.3 Kohm ±10% ¼W		R-R332KB
R106	10 Kohm ±10% ¼W		R-R103KB
R301	1 Kohm ±10% ¼W		R-R102KB
R302	3.3 Kohm ±10% ¼W		R-R332KB
R303	1.5 Kohm ±10% ¼W		R-R152KB
R304	1.5 Kohm ±10% ¼W		R-R152KB
R305	1 Kohm ±10% ¼W		R-R102KB
R308	1.5 Kohm ±10% ¼W		R-R152KB
R309	1 Kohm ±10% ¼W		R-R102KB
R310	15 Kohm ±10% ¼W		R-R153KB
R311	68 Kohm ±10% ¼W		R-R683KB
R312	8.2 Kohm ±10% ¼W		R-R822KB
R501	4.7 Kohm ±10% ¼W		R-R472KB
R502	22 Kohm ±10% ¼W		R-R223KB
R503	470 ohm ±10% ¼W		R-R471KB
R504	4.7 Kohm ±10% ¼W		R-R472KB
R505	22 Kohm ±10% ¼W		R-R223KB
R506	390 ohm ±10% ¼W		R-R391KB
R507	68 Kohm ±10% ¼W		R-R683KB
R508	100 Kohm ±10% ¼W		R-R104KB
R509	470 Kohm ±10% ¼W		R-R474KB
R510	100 ohm ±10% ¼W		R-R101KB
R511	2.7 Kohm ±10% ¼W		R-R272KB
R512	56 Kohm ±10% ¼W		R-R563KB
R513	1 Kohm ±10% ¼W		R-R102KB
R514	470 Kohm ±10% ¼W		R-R474KB
R515	470 ohm ±10% ¼W		R-R471KB
R516	47 Kohm ±10% ¼W		R-R473KB
R517	2.2 Mohm ±10% ¼W		R-R225KB
R518	68 Kohm ±10% ¼W		R-R683KB
R519	47 Kohm ±10% ¼W		R-R473KB
R520	1.8 Kohm ±10% ¼W		R-R182KB
R523	2.2 Kohm ±10% ¼W		R-R222KB
R524	2.7 Kohm ±10% ¼W		R-R272KB
R525	12 Kohm ±10% ¼W		R-R123KB
R526	3.3 Kohm ±10% ¼W		R-R332KB
R528	2.2 Kohm ±10% ¼W		R-R222KB
R531	4.7 Kohm ±10% ¼W		R-R472KB
R532	560 ohm ±10% ¼W		R-R561KB
R533	330 ohm ±10% ¼W		R-R331KB
R534	220 ohm ±10% ¼W		R-R221KB
R535	8.2 Kohm ±10% ¼W		R-R822KB
R536	82 ohm ±10% ¼W		R-R820KB

Symbol No.	Description	RS Part No.	Mfr's Part No.
	RESISTORS		
R537	330 ohm ±10% ¼W		R-R331KB
R538	330 ohm ±10% ¼W		R-R331KB
R541	4.7 Kohm ±10% ¼W		R-R472KB
R542	120 Kohm ±10% ¼W		R-R124KB
R543	10 Kohm ±10% ¼W		R-R103KB
R544	3.3 Kohm ±10% ¼W		R-R332KB
R702	4.7 Kohm ±10% ¼W		R-R472KB
R703	12 Kohm ±10% ¼W		R-R123KB
R704	1.5 Kohm ±10% ¼W		R-R152KB
R705	10 ohm ±10% ¼W		R-R100KB
R706	4.7 Kohm ±10% ¼W		R-R472KB
R707	390 ohm ±10% ¼W		R-R391KB
R708	1.5 Kohm ±10% ¼W		R-R152KB
R709	3.3 Kohm ±10% ¼W		R-R332KB
R710	24 Kohm ±10% ¼W		R-R243KB
R711	820 ohm ±10% ¼W		R-R821KB
R712	39 ohm ±10% ¼W		R-R390KB
R713	4.7 Kohm ±10% ¼W		R-R472KB
R714	1 Kohm ±10% ¼W		R-R102KB
R716	2.7 Kohm ±10% ¼W		R-R272KB
R717	15 Kohm ±10% ¼W		R-R153KB
R718	220 ohm ±10% ¼W		R-R221KB
R719	82 ohm ±10% ¼W		R-R820KB
R720	220 ohm ±10% ¼W		R-R221KB
R721	47 ohm ±10% ¼W		R-R470KB
R722	680 ohm ±5% ½W		R-R681JC
R723	0.5 ohm ±5% ½W		R-R0050JC
R724	0.5 ohm ±5% ½W		R-R0050JC
R725	12 ohm ±5% 1W		R-R120JD
R726	12 ohm ±5% 1W		R-R120JD
R727	5.6 Kohm ±10% ¼W		R-R562KB
R728	82 Kohm ±10% ¼W		R-R823KB
R901	4.7 Kohm ±10% ¼W		R-R472KB
R902	10 Kohm ±10% ¼W		R-R103KB
R903	220 ohm ±10% ¼W		R-R221KB
R904	1.5 Kohm ±10% ¼W		R-R152KB
R905	2.2 Kohm ±10% ¼W		R-R222KB
R906	8.2 Kohm ±10% ¼W		R-R822KB
R907	220 ohm ±10% ¼W		R-R221KB
R908	4.7 Kohm ±10% ¼W		R-R472KB
R909	470 ohm ±10% ¼W		R-R471KB
R910	8.2 Kohm ±10% ¼W		R-R822KB
R911	220 ohm ±10% ¼W		R-R221KB
R912	150 ohm ±10% 2W		R-R151KE
R913	220 ohm ±10% ¼W		R-R221KB
R914	2.7 Kohm ±10% ¼W		R-R272KB
R915	6.8 Kohm ±10% ¼W		R-R682KB
R916	270 ohm ±10% ¼W		R-R271KB

Symbol No.	Description	RS Part No.	Mfr's Part No.
	RESISTORS		
R917	220 ohm ±10% ¼W		R-R221KB
R918	4.7 Kohm ±10% ¼W		R-R472KB
R919	6.8 Kohm ±10% ¼W		R-R682KB
R920	560 ohm ±10% ¼W		R-R561KB
R921	3.3 Kohm ±10% ¼W		R-R332KB
R922	22 Kohm ±10% ¼W		R-R223KB
R923	100 ohm ±10% ¼W		R-R101KB
R924	1.8 Kohm ±10% ¼W		R-R182KB
R925	12 Kohm ±10% ¼W		R-R123KB
R926	33 ohm ±10% ¼W		R-R330KB
R927	100 ohm ±10% ¼W		R-R101KB
R928	4.7 ohm ±10% ¼W		R-R0470KB
R929	2.2 ohm ±10% ¼W		R-R0220KB
R930	47 ohm ±10% ¼W		R-R470KB
R931	5.6 ohm ±10% ¼W		R-R0560KB
R932	47 Kohm ±10% ¼W		R-R473KB
R933	1.5 Kohm ±10% ¼W		R-R152KB
R935	4.7 Kohm ±10% ¼W		R-R472KB
R936	6.8 Kohm ±10% ¼W		R-R682KB
	POTENTIOMETERS		
VR1	PC trimmer 50 KB	P-6203	R-R11010
VR2	PC trimmer 10 KB	P-6202	R-R11013
VR3	Potentiometer SQUELCH 10 KB	P-0742	4-222R512
VR4	PC trimmer 2 KB	P-6200	R-R110809
VR5	PC trimmer 50 KB	P-6203	R-R11010
VR6	PC trimmer 5 KB	P-6201	R-R11012
VR7	Potentiometer VOLUME 50 KD	P-1434	4-222R511
VR8	PC trimmer 20 KB		R-R11016
	TRANSFORMERS		
T301	IFT	CA7438	4-256R717
T302	IFT	CA-7439	4-256R715
T303	HF Filter	C-0540	4-253R905
T304	IFT	CA-7352	4-256R367
T305	IFT	CA-7350	4-256R703
T306	IFT	CA-7351	4-256R711
T701	IPT	TN-0066	4-254R118
T702	OPT	TD-0119	4-254R804
T703	Choke Coil		4-255R102

Symbol No.	Description	RS Part No.	Mfr's Part No.
	for Cabinet Assembly		
SP	Speaker, 8 ohms 3W	S-4501	4-151R801
Mic.	Microphone	M-2236	4-153R804
	Front Panel	Z-1879	176-2-122R112
	Cabinet	Z-1880	176-2-111R123A
	Back Lid	Z-1881	176-2-126R120A
	Marking Plate	HB-0811	176-2-143R132
	Marking Plate	HB-0812	176-2-143R133B
	Cover	Z-1882	176-2-244R107
	Lug		R-112432
	Rotary Knob Assembly, for VOL. and SQ.	K-1599	176-0-163R109
	Rotary Knob		176-2-163R119
	Inlay		R-262232
	Rotary Knob Assembly	K-1600	176-0-163R110
	Rotary Knob		176-2-163R129
	Dial Scale		176-2-146R108
	Spring		123-2-481R124
	Mounting Bracket	MB-0103	176-2-310R135
	Screw for Mounting Bracket	HS-1474	176-2-421R102A
	Microphone Bracket		176-2-385R102
	Rating plate		176-2-141R136
	Insert Nut		176-2-413R113
	Lug		123-2-472R004
	Lug		R-23275
	Lug		123-2-472R006
	Lug		123-2-472R004
	Control Bracket/Chassis	Z-1883	176-2-311R110
	Fixwe	HB-0816	176-2-464R114
	PC Board	X-4740	4-226R839B
	Bracket	HB-0817	176-2-210R101A
	Knob, for Slide	K-1601	123-2-155R105
	Slide Knob		176-2-164R103
	Holder, for AC and DC Cord	HB-0818	R-355227
	Push Button	K-1602	176-2-161R120
	Cushion, for PC Board	J-6254	4-235R002
	Socket, for Ext. SP. and PA. Jack		4-235R806
	Receptacle, for Ext. Ant	J-6255	4-235R101A
	Socket, for Microphone	J-6256	4-236R803
	Plug, for Microphone	J-6257	4-511R10592
	Meter	M-0242	4-231R504A
	Rotary Switch	S-1138	4-231R140
	Slide Switch, for Delta Tune	S-2227	176-2-368R106
	Heat Sink, for Q704, 705		176-2-368R112B
	Heat Sink, for Q909		4-612R10691
	Lamp	L-0499	123-2-383R104
	Fuse Holder, for DC	F-1096	4-234R809
	Fuse 2A, for DC	HF-0087	4-231R810
	Push Switch, for Noise Blanker and Noise Limiter	S-7166	4-231R810

Symbol No.	Description	RS Part No.	Mfr's Part No.
	for Cabinet Assembly		
	Lug		123-2-472R006
	Lug, for C951		123-2-472R004
	Screw, 5x16mm, Set Mtg.	HS-1475	R-Y115016B
	Washer, 5mm, Set Mtg.	HW-0782	R-Y335000
	Screw, 3x4mm, Microphone Bracket Mtg.		R-Y013004
	Screw, 3x8mm, Front Panel Mtg.		R-Y113008B
	Washer, 3mm, Front Panel Mtg.		R-Y323000
	Screw, 2.6x4mm, Chassis Mtg.		R-Y022604
	Screw, 3x6mm, Push Switch Mtg.		R-Y113006
	Screw, 3x4mm, Microphone Socket Mtg.		R-Y013004
	Screw, 3x6mm, PC Board Mtg.		R-Y013006
	Washer, 3mm, PCB Mtg.		R-Y34300002
	Screw, 3x6mm, Transformer Mtg.		R-Y013006
	Washer, 3mm, Transformer Mtg.		R-Y323000

Symbol No.	Description	RS Part No.	Mfr's Part No.
	for Cabinet Assembly		
	Washer, 3mm, Transformer Mtg.		R-Y333000
	Nut, 3mm, Transformer Mtg.		R-Y23300001
	Screw, 3x6mm, Bracket Mtg.		R-Y103006
	Nut, 3mm, Bracket Mtg.		R-Y23300001
	Screw, 2.6x4mm, Slide Switch Mtg.		R-Y022604
	Screw, 3x6mm, Heat Sink Mtg.		R-Y013006
	Screw, 3x6mm, Heat Sink Mtg.		R-Y013006
	Nut, 3mm, Heat Sink Mtg.		R-Y23300001
	Screw, 3x6mm, Heat Sink Mtg.		R-Y013006
	Screw, 3x6mm, Chassis Mtg.		R-Y083006
	Screw, 3x10mm, 2SC799 Mtg.		R-Y013010
	Nut, 3mm, 2SC799 Mtg.		R-Y2330001
	Screw, 3x6mm, Speaker Mtg.		R-Y033006
	Washer, 3mm, Speaker Mtg.		R-Y323000
	Nut, 3mm, Speaker, Mtg.		R-Y23300001
	Nut, 3mm, Heat Sink Mtg.		R-Y23300001

RADIO SHACK A TANDY CORPORATION COMPANY

U.S.A.: FORT WORTH, TEXAS 76107
CANADA: BARRIE, ONTARIO, CANADA L4M 4W5

TANDY CORPORATION

AUSTRALIA	BELGIUM	U. K.
280-316 VICTORIA ROAD RYDALMERE, N.S.W. 2116	PARC INDUSTRIEL DE NANINNE 5140 NANINNE	BILSTON ROAD WEDNESBURY, STAFFS WF10 7JN

10A4

PRINTED IN JAPAN