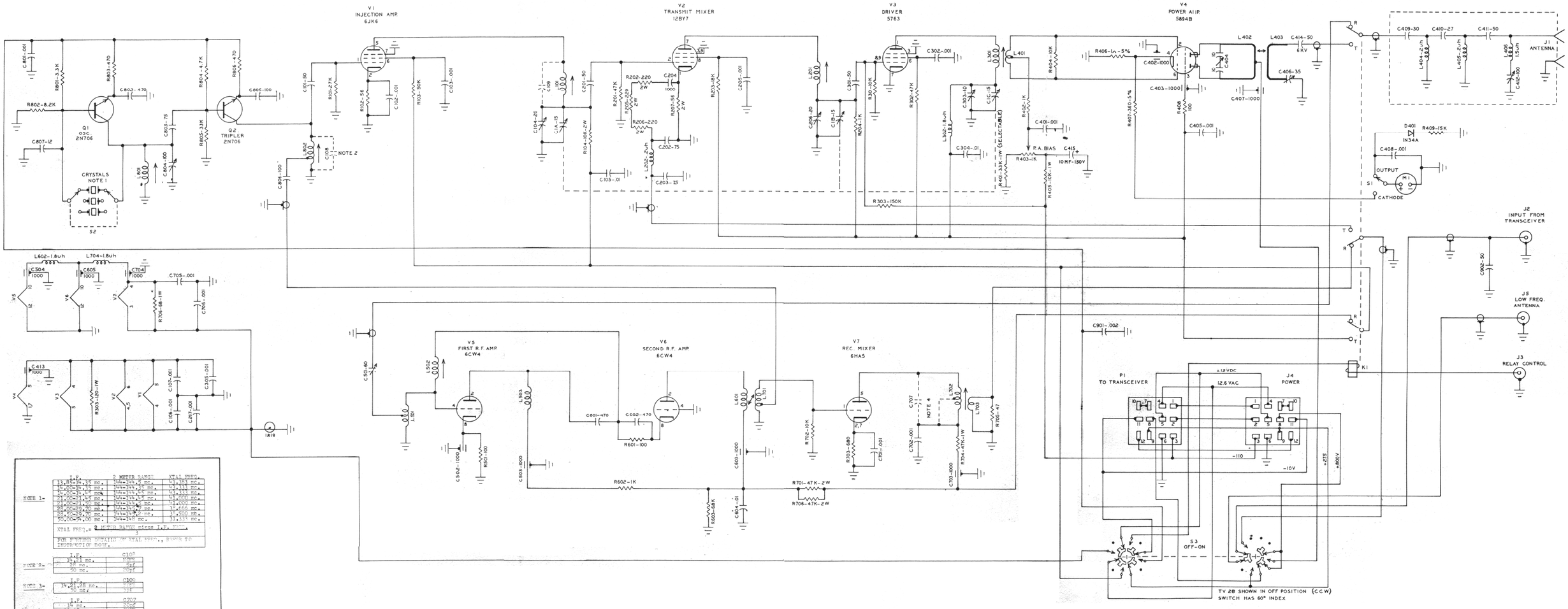

I.F.	2 METER RANGE	XTAL FREQ.
13.85-14.35 mc.	144-144.5 mc.	43.383 mc.
14.00-14.35 mc.	144-144.35 mc.	43.333 mc.
14.00-14.45 mc.	144-144.45 mc.	43.333 mc.
21.00-21.45 mc.	144-144.45 mc.	41.000 mc.
21.00-21.50 mc.	144-144.5 mc.	41.000 mc.
28.00-28.20 mc.	144-145.7 mc.	38.666 mc.
28.50-29.70 mc.	144-145.2 mc.	38.500 mc.
50.00-54.00 mc.	144-148 mc.	31.333 mc.

XTAL FREQ. = $\frac{\text{2 METER RANGE minus I.F. FREQ.}}{3}$

FOR FURTHER DETAILS ON XTAL FREQ., REFER TO INSTRUCTION BOOK.

I.F.	C102
14.21 mc.	NONE
28 mc.	5pf
50 mc.	20pf

I.F.	C109
14.21.28 mc.	NONE
50 mc.	5pf

I.F.	C207
14 mc.	20pf
21.50 mc.	NONE
50 mc.	NONE

CONVERT JUMPER ACROSS HALF OF 1702

12/16/68 ©

SCHEMATIC DIAGRAM SWAN MODEL TV-2B SINGLE SIDEBAND TRANSVERTER