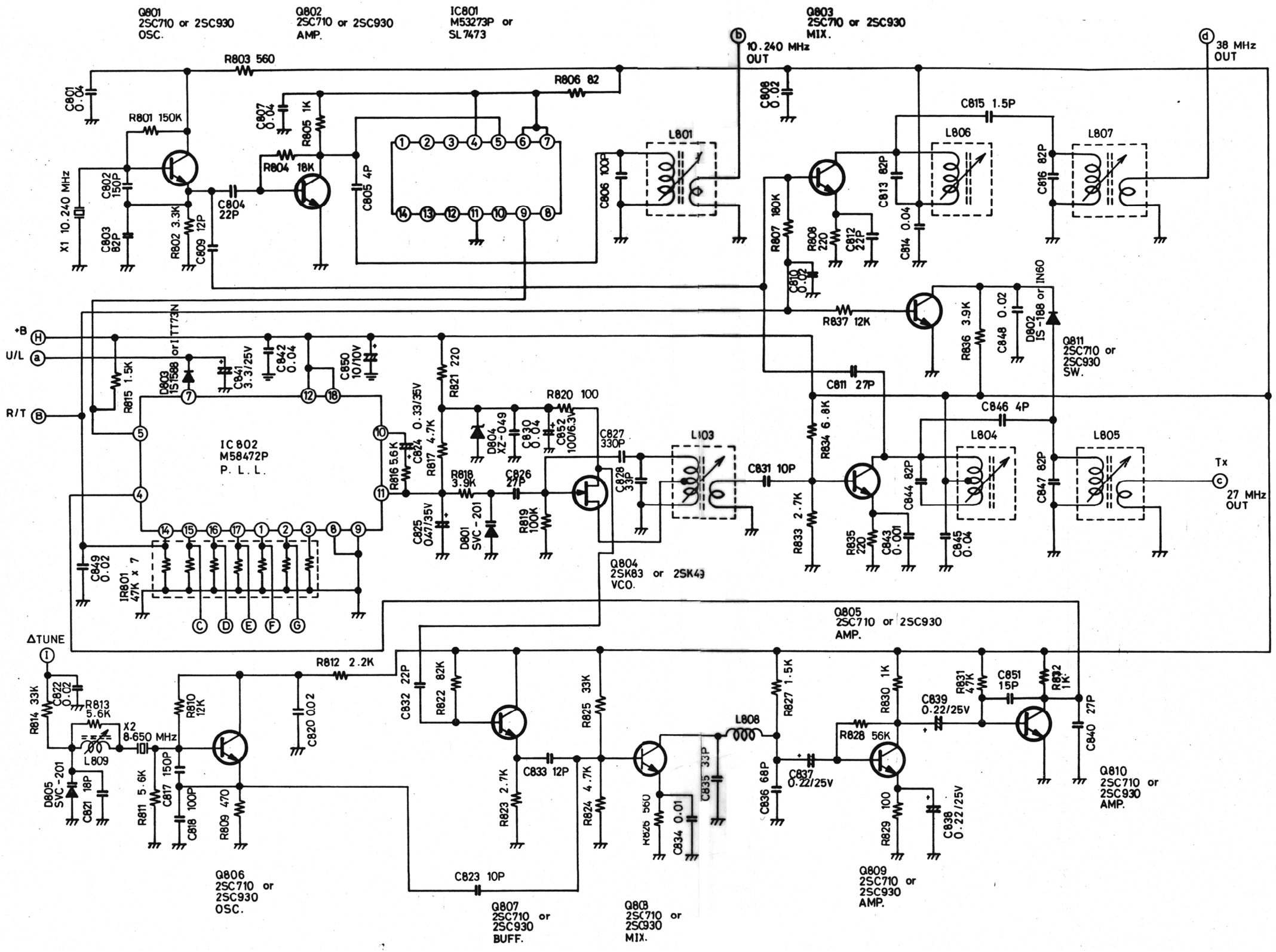
Q801
2SC710 or 2SC930
OSC.
Q802
2SC710 or 2SC930
AMP.
IC801
M53273P or
SL7473
Q803
2SC710 or 2SC930
MIX.
10.240 MHz
OUT
38 MHz
OUT
R803 560
R806 82
C801 0.04
R801 150K
C807 0.04
R805 1K
R804 18K
C804 22P
C805 4P
C802 150P
C803 82P
R802 3.3K
C809 12P
X1 10.240 MHz
C806 100P
L801
C808 0.02
C815 1.5P
L806
L807
C813 82P
C816 82P
R807 180K
R808 220
C812 22P
C814 0.04
C810 0.02
R837 12K
R836 3.9K
C848 0.02
D802 IS-188 or IN60
Q811
2SC710 or
2SC930
SW.
+B
U/L
R/T
R815 1.5K
D803 1S1588 or 1TT73N
C841 3.3/25V
C842 0.04
C850 10/10V
R821 220
IC802
M58472P
P. L. L.
R816 5.6K
C824 0.33/35V
R817 4.7K
R818 3.9K
C826 27P
C825 0.47/35V
D801 SVC-201
R819 100K
D804 XZ-049
C830 0.04
C852 100/6.3V
R820 100
C827 330P
C828 33P
L103
C831 10P
C811 27P
R834 6.8K
R833 2.7K
C846 4P
L804
L805
C844 82P
C847 82P
R835 220
C843 0.001
C845 0.04
Tx
27 MHz
OUT
C849 0.02
1R801 47K x 7
Q804
2SK83 or 2SK49
VCO.
Q805
2SC710 or 2SC930
AMP.
ΔTUNE
R814 33K
C822 0.02
R813 5.6K
X2 8.650 MHz
L809
D805 SVC-201
C821 18P
R811 5.6K
C817 150P
C818 100P
R810 12K
R809 470
Q806
2SC710 or
2SC930
OSC.
R812 2.2K
C820 0.02
C832 22P
R822 82K
R823 2.7K
C833 12P
C823 10P
Q807
2SC710 or
2SC930
BUFF.
R825 33K
R824 4.7K
R826 560
C834 0.01
C835 33P
Q808
2SC710 or
2SC930
MIX.
L808
R827 1.5K
C836 68P
C837 0.22/25V
R828 56K
R830 1K
C839 0.22/25V
R829 100
C838 0.22/25V
Q809
2SC710 or
2SC930
AMP.
R831 47K
C851 15P
R832 1K
C840 27P
Q810
2SC710 or
2SC930
AMP.