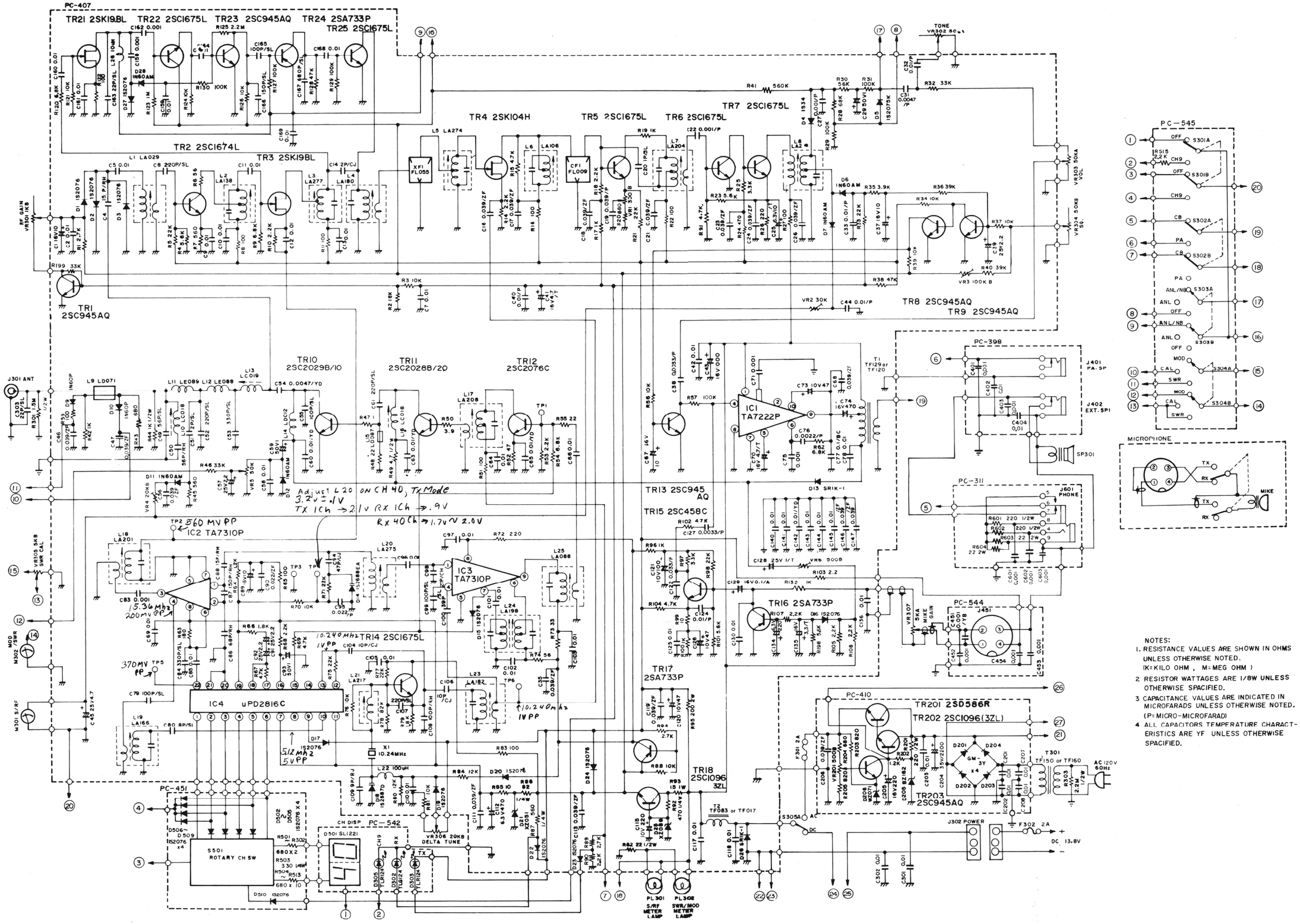

NOTES:

1. RESISTANCE VALUES ARE SHOWN IN OHMS UNLESS OTHERWISE NOTED. (K=KILO OHM , M=MEG OHM)
2. RESISTOR WATTAGES ARE 1/8W UNLESS OTHERWISE SPACIFIED.
3. CAPACITANCE VALUES ARE INDICATED IN MICROFARADS UNLESS OTHERWISE NOTED. (P=MICRO-MICROFARAD)
4. ALL CAPACITORS TEMPERATURE CHARACTERISTICS ARE YF UNLESS OTHERWISE SPACIFIED.