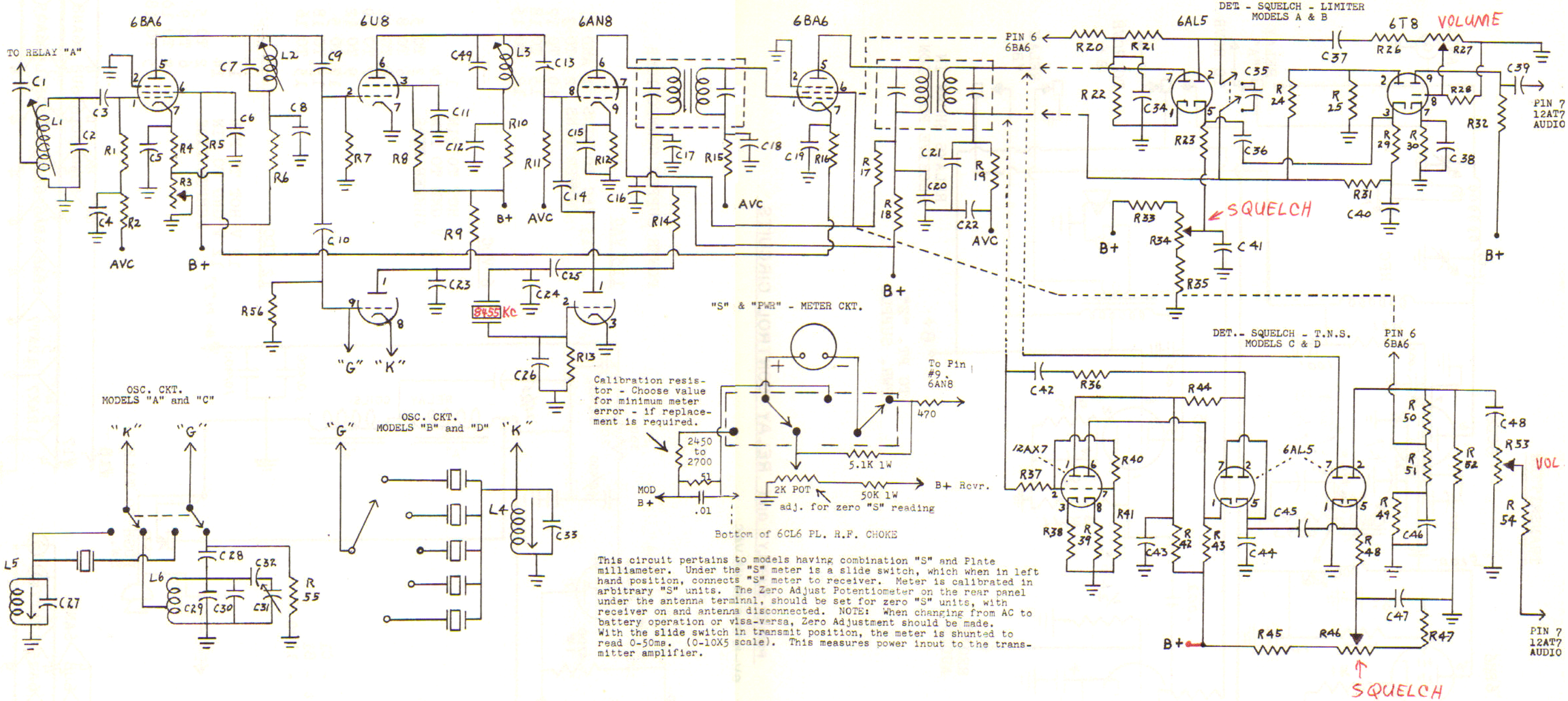

This circuit pertains to models having combination "S" and Plate milliameter. Under the "S" meter is a slide switch, which when in left hand position, connects "S" meter to receiver. Meter is calibrated in arbitrary "S" units. The Zero Adjust Potentiometer on the rear panel under the antenna terminal, should be set for zero "S" units, with receiver on and antenna disconnected. NOTE: When changing from AC to battery operation or visa-versa, Zero Adjustment should be made. With the slide switch in transmit position, the meter is shunted to read 0-50ma. (0-10X5 scale). This measures power input to the transmitter amplifier.

LEGEND

C1, C2, C7, C9, C27	12 mmf.
C3	20 mmf.
C4, C25	.0015 mfd.
C5, C6, C34, C42, C45	.01 mfd.
C8, C12, C17, C18, C20, C22, C40	.02 mfd.
C10, C14	2.2 mmf.
C11, C15, C23	.005 mfd.
C13, C24, C26	47 mmf.
C19, C41, C43	.1 mfd.
C35, C36, C37, C39, C46, C48	.002 mfd.
C47	.04 mfd.
C44	470 mmf.
C21	100 mmf.
C49	150 mmf. Mica
C33	6 mmf.
C28	47 mmf. NPO
C29	15 mmf. NPO
C30	12 mmf. N750
C31	Var. Cond. FM5330
C32	10 mmf. NPO
C16	1 mfd.
C38	4 mfd. 6V Elect.

R1, R7, R11, R19, R21, R22, R23, R29	1 meg.
R31, R42, R43, R45, R48, R49, R50	1 meg.
R2, R15, R26, R36, R37, R40	220K ohms
R5, R8, R9, R18	51K ohms
R6, R10, R12	1K ohms
R14, R24, R25, R56	100K ohms
R28	50K ohms
R41, R55	56K ohms
R13	47K ohms
R17	82K ohms
R20, R32, R51	500K ohms
R30	3.3K ohms
R35, R47, R54	330K ohms
R33, R44	1.5 meg.
R52	3.9 meg.
R38, R39	1.5K ohms
R4	82 ohms
R16	680 ohms
R3	10K ohm Pot.
R27, R34, R46, R53	500K ohm Pot

INDUCTORS

L1	Antenna
L2	R.F. Plate
L3	8mc. I.F.
L4	Xtal Osc. Models B & D
L5	Xtal Osc. Models A & C
L6	Tune. Osc. Models A & C

SCHEMATIC FALCON MK V TRANSCEIVER
MODELS - A - B - C - D

		DATE	REVISED	DATE
DWN. BY	F.J.	4/1/62		
CKD. BY	R.L.	4/2/62		